CASE STUDY

TRANSFORMING EBPR: NON-VFA PATHWAY SUCCESS WITH EOSI'S MICROC®2000

A Maryland municipality operating a water reclamation plant commissioned an evaluation study to migrate their treatment process toward using EOSi's non-hazardous MicroC® 2000 carbon sources for enhanced biological phosphorus and chemical oxygen demand removal — while reducing ferric chloride and methanol usage and overall chemical costs.

Client: Maryland Municipality

Facility: Municipal Water Reclamation Plan

Flow Design/Actual: 15 MGD/7.5 MGD

Treatment Technology: Activated Sludge

Background: Ferric & Methanol Drawbacks

The Maryland 7.5 MGD treatment plant operates four trains, each consisting of nine reactors. The mixed liquor suspended solids (MLSS) from the four trains flow into a common post anoxic zone (ML1 to ML3) prior to membrane bioreactor (MBR) basins.

Recirculating aquaculture systems (RAS) deliver MBR discharges to Reactor #5A of each train. The process can recirculate the MLSS from Reactor #8 to Reactor #1 (a four-stage configuration) or from Reactor #8 to Reactor #3 (a five-stage configuration).

The plant is required to comply with a total phosphorus (TP) discharge limit of 6,820 lbs. per year, corresponding to concentrations of 0.3 mg P/L. The plant is also required to meet a total nitrogen (TN) discharge limit of 4.1 mg N/L, accomplished historically by adding methanol at average rates of 260 and 300 gallons per day (GPD) and to the primary effluent and post anoxic zones respectively, totalling 560-650 GPD of methanol.

Phosphorus removal was achieved solely by chemical precipitation using 38% wt. ferric chloride($FeCl_3$) solution with an average injection rate of 650±62 GPD in the MBR basins. Before and during the evaluation, the plant was operated with a four-stage configuration and average discharge TP and TN of 0.32±0.1mg P/L and 2.55±0.1 mg N/L, respectively.

The ratio of influent biological oxygen removal (BOD) and total phosphorus for the plant was 33.7±3.8. However, BOD was not achieved because of short 15.7-minute collective hydraulic retention times (HRT) of unaerated zones — and because the ratio of unaerated (anaerobic and anoxic) to aerated sludge measured only 10.2% of the total MLSS.

FIGURE 1 Process flow diagram of the plant.

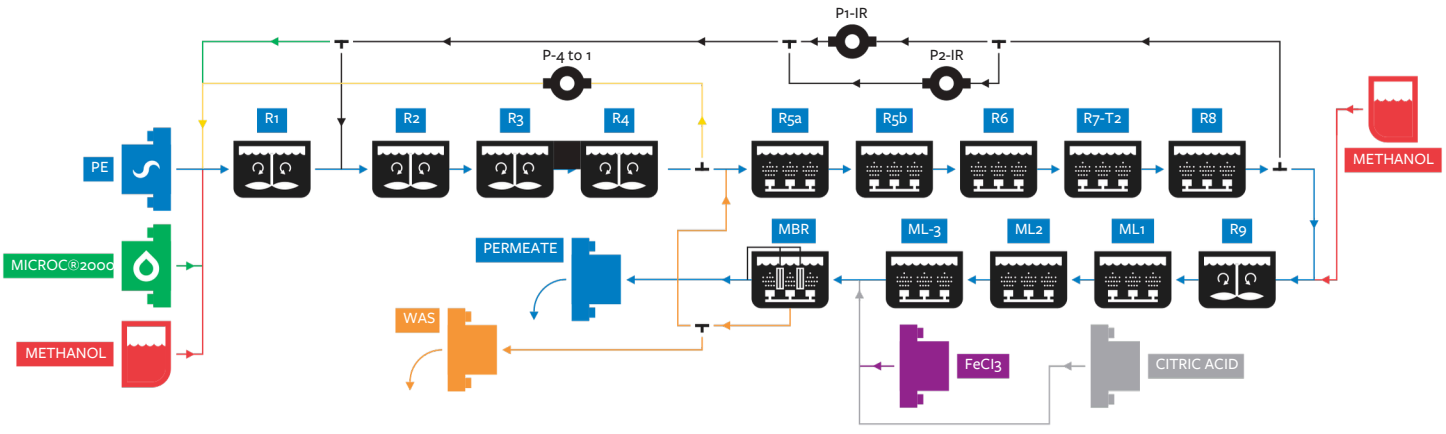

MicroC® Premium Carbon Sources

FIGURE 2 Chemical Removal and effluent TP concentration.

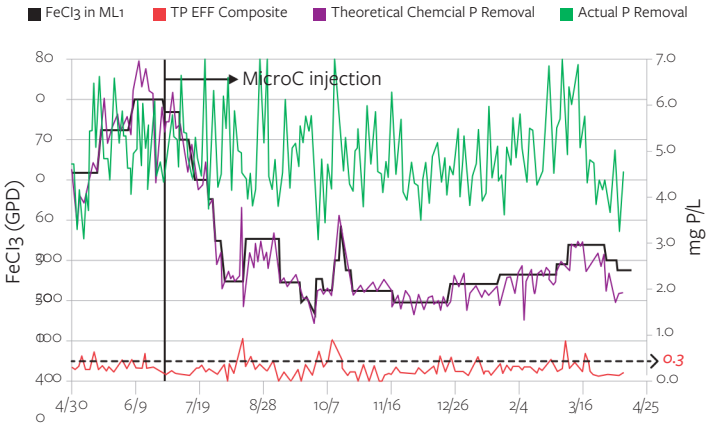

FIGURE 3 Nutrient profiling in Train 3 before and during the study.

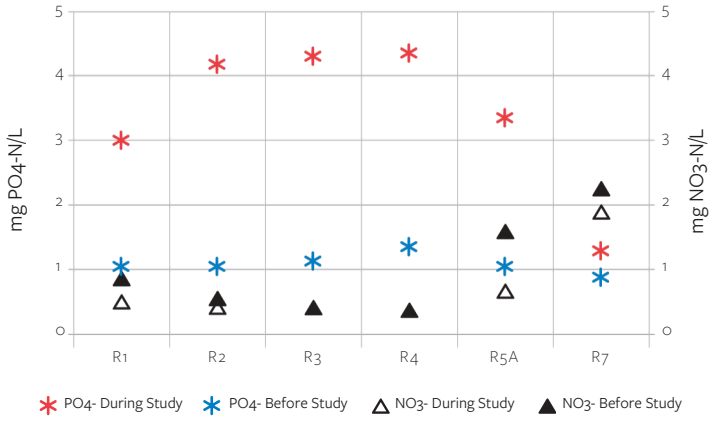

MicroC® 2000 Evaluation Study

The plant's municipal operator was seeking to change the treatment process to rely less on using ferric chloride and methanol, and toward accomplishing EBPR by adding MicroC® 2000 as a glycerol-based electron-donor. Under short hydraulic retention times, fermentation of glycerol is either insignificant or not possible. However, glycerol acclimated biomass is capable of rapid chemical oxygen demand (COD) removal as well as biological phosphorus removal.[1] This indicates a PAO population utilizing a non-conventional EBPR pathway that is based on direct sequestration of glycerol to remove phosphorus biologically.

EBPR Strategies

Two strategies were implemented to induce EBPR in the plant: 1.) MicroC® 2000 was added to Reactor #1 with HRT of 4.9 minutes, and 2.) the aerobic Reactor #5a was converted to an intermittent aeration basin (6 hours of aeration and 18 hours non-aeration), increasing the 10.2% unaerated-to-aerated sludge ratio recorded before the evaluation to a 20.6% unaerated-to-aerated sludge ratio during the study.

MicroC® 2000 Performance

MicroC® 2000 injection was started at a feed rate of 225 GPD to the primary effluent (PE) stream. Prior to the MicroC addition, there was insignificant biological phosphorus activity in the process demonstrated by the absence of phosphorus release in the pre anoxic and anaerobic basins, despite adequate BOD/TP ratios of up to 33.7±3.8, and low concentrations of nitrogen oxides (NOx) in Reactors #1, #2, #3, and #4.

Following the addition of MicroC, the FeCl3 injection was reduced from 650 GPD to 220 GPD, while the average effluent TP remained below the target concentration of 0.3 mg P/L. It was apparent that before MicroC addition, the theoretical chemical P precipitation correlated well with the actual P removal with an average standard error of 9.2%.

In contrast, after MicroC addition there was a significant deviation between the actual P removal and theoretical chemical precipitation (an average value of 2.8±0.7 mg P/L), indicating the presence of biological phosphorus activity in the process. The reduction in ferric resulted in 50% reduction in citric acid usage which was added for membrane cleaning.

After acclimation of sludge with MicroC 2000, phosphorus release occurred consistently in all trains. The phosphorus release achieved in Reactors #2, #3 and #4 occurred at a total retention time (HRT) of 10 minutes at average daily flow rate, which was further reduced to 7 minutes at peak flows.

The study did not directly target enhancing the biological nitrogen removal, but the plant achieved an average effluent total nitrogen concentration of 1.4 mg N/L, compared to 2.4 mg/L prior to the MicroC addition. The methanol usage dropped from 560 GPD to 325 GPD during the evaluation. The cost of all chemicals before and during the study is shown in Figure 4.

MicroC® Success Metrics

- The application of EOSi's MicroC® 2000 as an electron donor for enhanced biological removal resulted in an average biological phosphorus removal of ~2 mg P/L while maintaining the effluent TP at an average concentration of 0.27 mg P/L.
- Using MicroC for promoting EBPR process reduced FeCl3 usage by 70%, methanol by 35%, and citric acid by 50%.
- The total annual savings on chemical usage for this plant by using MicroC 2000: $110,000.

FIGURE 4 The cost of chemicals; before study (Jan to June), during study (June to Dec)

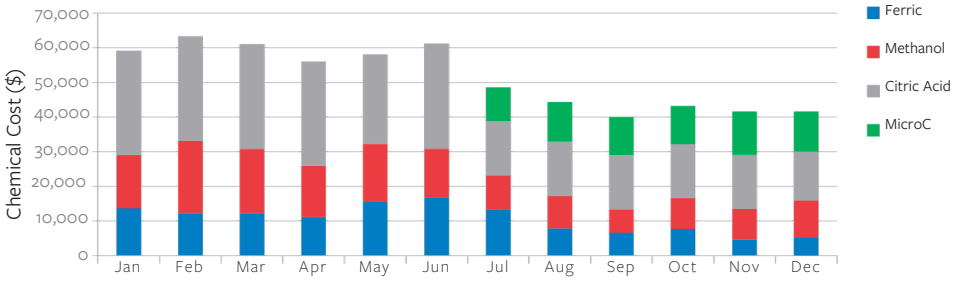

1. Coats, E. R., Dobroth Z. T., Brinkman C. K., 2015. EBPR Using Crude Glycerol: Assessing Process Resiliency and Exploring Metabolic Anomalies. Water Environment Research 87(1), 68-79